Air COMMAND
'Stands the test of time'

AIR COMPRESSOR
AC13D

Duratech
Professional Maintenance Free Technology

V2PRO Pump

10A Plug 230V

2 YEAR WARRANTY

Air Command 2.75HP Belt Driven 50LT Duratech Silent Series 10amp

The AC13D brings Duratech Professional Maintenance Free technology to your workshop. Built for serious professionals who want the job done quieter and faster, it runs a V2PRO pump for smooth, reliable performance without the noise of a conventional compressor. Medical grade air output, so your air tools last longer and your finishing work comes out more precise. Oil free operation means no oil changes and no oil in your air line. A 50 litre tank keeps air supply steady during continuous use. Belt drive design and 230V 50Hz single phase power make the AC13D easy to run in any workshop.

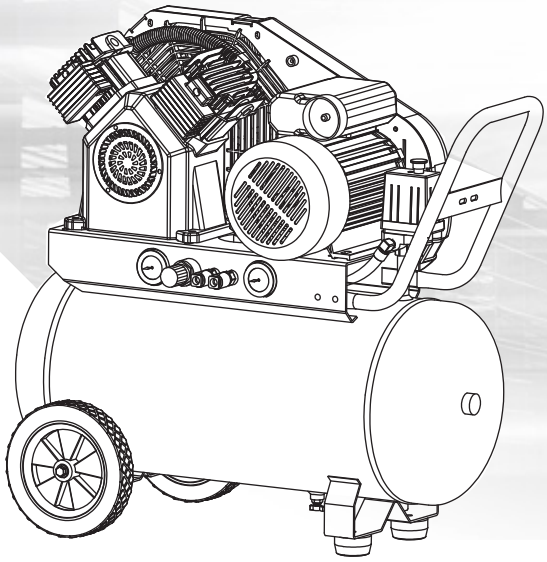

- ✓ **Duratech Professional Maintenance Free compressor technology**
  Keep working with no scheduled maintenance downtime
- ✓ **V2PRO precision engineered pump**
  Quieter, faster air delivery so you get the job done sooner
- ✓ **Medical grade air output**
  Protects your air tools and improves precision performance
- ✓ **Oil free operation**
  No oil changes, no oil contamination in your air line
  50 litre tank capacity
- ✓ **Dual Outlets + Strong Air Reserve**
  Consistent air supply for continuous tool use on site

Technical Specifications

Power Supply	230V-50Hz 10A
Motor Size	2.75HP
Tank Volume	50L
Max. Pressure	120PSI
Pump Speed	1100 rpm
Motor Speed	2850 rpm
Pump Displacement	310L/min 11CFM
FAD Free Air Delivery	190L/min 7CFM
Weight	57kg
Dimensions	950 x 400 x 760mm

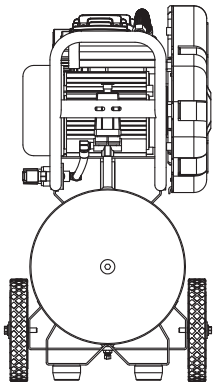

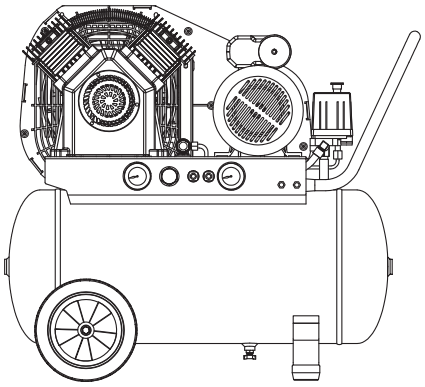

Key Optional Accessories

1



2



1. AC10HS - SuperFlex Air Hose 3/8" x 10m
2. AC3820HR - Dual Arm Steel Retractable Air Hose Reel 20m

For more information, visit the website.

AC13D
User guide, specs, videos
LEARN MORE